Smun
XIMENG ELECTRIC

Zhejiang Ximeng Electronic Technology Co., Ltd.

15W Rail-Mount Type DC-DC Converter DRD-15



Dimensions: 90*54.5*17.5mm

Features

- Ultra-slim width 17.5 mm (1SU)
- 4:1 ultra-wide input voltage range
- No minimum load requirement
- Adjustable DC output voltage (±10%)
- Natural convection cooling
- Wide operating temperature: -40°C to +85°C
- Input mounting rails: TS-35/7.5 or 15
- Protection:Overload/Over voltage/Short circut/Reverse polarity
- 3 kVDC input/output isolation,Enhanced isolation rating
- 3 years warranty

ISO9001:2008

Specifications

Model		DRD-15G-5	DRD-15G-12	DRD-15G-15	DRD-15G-24
Output	Output Voltage	5 V	12 V	15 V	24 V
	Rated Current	3 A	1.25 A	1 A	0.63 A
	Current Range??	0–3 A	0–1.25 A	0–1 A	0–0.63 A
	Rated Power	15 W	15 W	15 W	15 W
	Ripple & Noise (max)	50 mVp-p	60 mVp-p	75 mVp-p	100 mVp-p
	Voltage Adjustment Range	4.5–5.5 V	9–13.2 V	13.5–16.5 V	21.6–28 V
	Voltage Accuracy	±2.0%	±2.0%	±2.0%	±2.0%
	Line Regulation	±0.5%	±0.5%	±0.5%	±0.5%
	Load Regulation	±1.0%	±0.5%	±0.5%	±0.5%
	Startup Time	120 ms			
	Rise Time	85 ms(full load)			
	Hold-Up Time (Typ.)	G-type:8 ms @ 24 V Input			
	External Capacitance	3300 μF	1200 μF	1200 μF	680 μF
Input	Input Voltage Range	9–36 V DC			
	Efficiency (Typ.)	84%	85%	85%	86%
	DC Current	0.8A/24VDC			
	Inrush Current	15A/24VDC			
Protection	Overload	Rater Power 110-150%			
		Hiccup mode,recovers automatically after fault condition is removed			
	Over Voltage	5.75–7 V	13.8–16.2 V	17.25–20.25 V	28.8–34 V
		Protection type : Shut down o/p voltage, re-power on to recover			
	Reverse Polarity	MOSFET-based auto-recovery (no damage)			
	Undervoltage Lockout	24 V input(G type): ON =9 V, OFF =8.5 V			
Environment	Operating Temperature	-40°C to +85°C (refer to derating curve)			
	Humidity	5%–95% RH (non-condensing)			
	Storage Temp./Humidity	-40°C to +85°C, 5%–95% RH (non-condensing)			
	Temperature Coefficient	±0.03%/°C (0°C–60°C)			
	Vibration Resistance	10–500 Hz, 2G (X/Y/Z axes, 60 min/cycle)			
	Altitude	2000 m			
Safety & EMC	Safety Compliance	IEC 62368-1 GB4943.1			
	EMC Emission	EN55032 (CISPR32) Class B, EN61000-3-3			
	EMC Immunity	EN 61000-4-2, 3, 4, 5, 6, 8			
	Withstand voltage	I/P-O/P:3KVDC			
	Isolation resistance	I/P-O/P>100M Ohms / 500Vdc / 25℃/ 70% RH			
Others	MTBF	907 k hours (min.) @ 25°C (MIL-HDBK-217F)			
	Dimensions	17.5 × 90 × 54.5 mm (W×H×D)			
	Weight	68g/piece			
Note	1.All specifications are measured under 24 VDC input, rated load, and 25°C ambient temperature unless specified. 2.Ripple/noise measurement method: 12" twisted pair with 0.1 μF + 47 μF capacitors in parallel, 20 MHz bandwidth. 3.Accuracy includes setting error, line regulation, and load regulation. 4.Derating required under low input voltage; refer to the derating curve. 5.EMC compliance must be verified in end-device integration. 6.Elevated temperature derating applies above 2000 m (6500 ft):				

15W Rail-Mount Type DC-DC Converter DRD-15

Specifications

Model		DRD-15L-5	DRD-15L-12	DRD-15L-15	DRD-24L-24
Output	Output Voltage	5 V	12 V	15 V	24 V
	Rated Current	3 A	1.25 A	1 A	0.63 A
	Current Range??	0–3 A	0–1.25 A	0–1 A	0–0.63 A
	Rated Power	15 W	15 W	15 W	15 W
	Ripple & Noise (max)	50 mVp-p	60 mVp-p	75 mVp-p	100 mVp-p
	Voltage Adjustment Range	4.5–5.5 V	9–13.2 V	13.5–16.5 V	21.6–28 V
	Voltage Accuracy	±2.0%	±2.0%	±2.0%	±2.0%
	Line Regulation	±0.5%	±0.5%	±0.5%	±0.5%
	Load Regulation	±1.0%	±0.5%	±0.5%	±0.5%
	Startup Time	120 ms			
	Rise Time	85 ms(full load)			
	Hold-Up Time (Typ.)	L-type:16 ms @ 48V Input			
	External Capacitance	3300 μF	1200 μF	1200 μF	1000 μF
Input	Input Voltage Range	18-75 V DC			
	Efficiency (Typ.)	85%	86%	86%	87%
	DC Current	0.4A/48VDC			
	Inrush Current	15A/48VDC			
Protection	Overload	Rater Power 110-150%			
		Hiccup mode,recovers automatically after fault condition is removed			
	Over Voltage	5.75–7 V	13.8–16.2 V	17.25–20.25 V	28.8–34 V
		Protection type : Shut down o/p voltage, re-power on to recover			
	Reverse Polarity	MOSFET-based auto-recovery (no damage)			
	Undervoltage Lockout	48 V input(G type): ON =18 V, OFF =17 V			
Environment	Operating Temperature	-40°C to +85°C (refer to derating curve)			
	Humidity	5%–95% RH (non-condensing)			
	Storage Temp./Humidity	-40°C to +85°C, 5%–95% RH (non-condensing)			
	Temperature Coefficient	±0.03%/°C (0°C–60°C)			
	Vibration Resistance	10–500 Hz, 2G (X/Y/Z axes, 60 min/cycle)			
	Altitude	2000 m			
Safety & EMC	Safety Compliance	IEC 62368-1, GB4943.1			
	EMC Emission	EN55032 (CISPR32) Class B, EN61000-3-3			
	EMC Immunity	EN 61000-4-2, 3, 4, 5, 6, 8			
	Withstand voltage	I/P-O/P:3KVDC			
	Isolation resistance	I/P-O/P>100M Ohms / 500Vdc / 25℃/ 70% RH			
Others	MTBF	907 k hours (min.) @ 25°C (MIL-HDBK-217F)			
	Dimensions	17.5 × 90 × 54.5 mm (W×H×D)			
	Weight	68g/piece			
Note	1.All specifications are measured under 24 VDC input, rated load, and 25°C ambient temperature unless specified. 2.Ripple/noise measurement method: 12" twisted pair with 0.1 μF + 47 μF capacitors in parallel, 20 MHz bandwidth. 3.Accuracy includes setting error, line regulation, and load regulation. 4.Derating required under low input voltage; refer to the derating curve. 5.EMC compliance must be verified in end-device integration. 6.Elevated temperature derating applies above 2000 m (6500 ft):				

15W Rail-Mount Type DC-DC Converter DRD-15

Mechanical Specification

measurement unit : mm

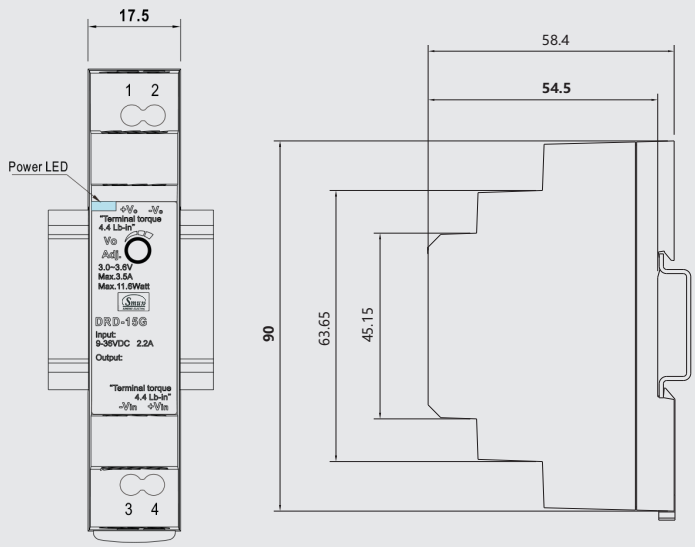

Terminal Pin No. Assignment

Pin NO.	Assignment
1	DC OUT + Vo
2	DC OUT - Vo
3	DC IN - Vin
4	DC IN + Vin

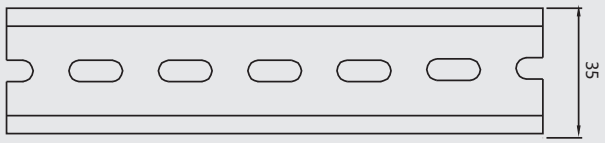

Din Rail TS35/7.5 or TS35/15

Block Diagram

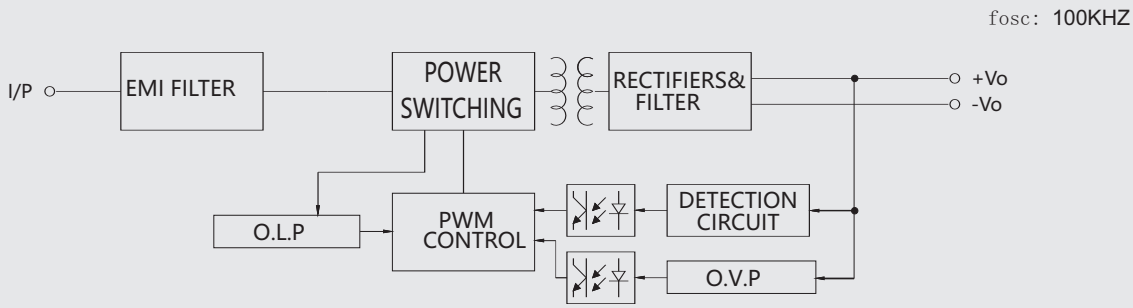

Derating Curve

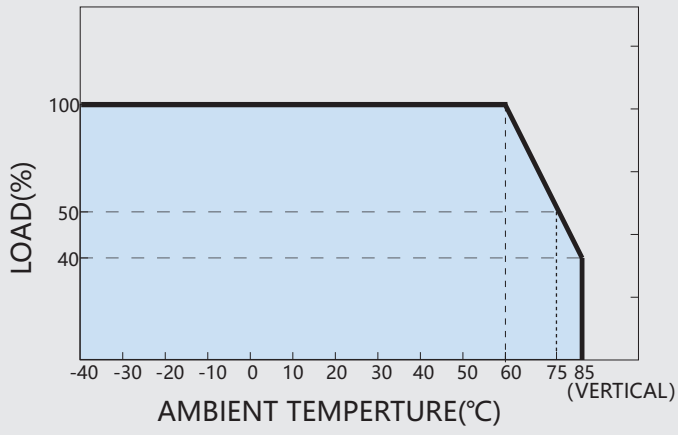

Static Characteristics

